TOOL CATALOG

QUALITY TOOLS FOR INSTALLING POWER CABLE SYSTEMS

(262) 784-8701
www.spdsystems.com
Brookfield, WI

AMERICAN MADE SINCE 1970

Speed Systems has been manufacturing quality, field-tested products since 1970. Our tools are designed and built in our manufacturing facility in Brookfield, Wisconsin.

We focus on safety, efficiency, ergonomics and value as we design and build tools to meet specific customer needs. We offer solutions for preparing primary and secondary cable for termination, as well as products for installing specific cable system components.

We take pride in supplying high quality tools and look forward to working with you on your specific applications or needs.

Contents

New tools 1
Underground Primary Cable Prep
- Insulation Removal 2-4
- Outer Jacket Removal 5
- Semi-Con Scoring 6-7
- Chamfering Tools 8

Specialty Cable Prep
- Aerial Tree Wire and Spacer Cable 9

Secondary Cable Prep
- End-Strip 10
- Mid-Span 11
- Covered Tap-Wire 11

Blades 12
Torque Tools
- Loadbreak Probe Tools 13
- Bushing Insert Tools 14
- Loadbreak Reducing Tap Plug Bushing Tools 15

Component Installation & Removal Tools 16-17
Wrenches
- Ratcheting Box Wrenches 18
- Hex Wrenches 19-20
- Penta Wrenches 21
- Tap & Die Wrenches 22

Accessories
- Non-Isolated 23
- Isolated 24
- Knives & Pliers 25

Elbow & Cap Pulling Tools 26
Tool Boxes & Bags 27
Kits 28-29

NEW TOOLS

1542-2CL-DO

The 1542-2CL-DO is a drill-operated version of Speed Systems' popular 1542-2CL insulation stripper. It is designed to provide unlimited stripback of insulation.

The tool provides precise blade depth adjustment and maximizes the reliability of installation.

- No bushings required
- Unlimited stripback length
- Use only a low-speed drill, not an impact drill
- Features a lock for hand operation, if necessary
- Includes a tool stop and bag

SCAN FOR VIDEO

DOBT

The DOBT is a drill-operated bushing tool designed to strip back the covering on covered conductor and tree wire cables. It is designed to provide unlimited stripback.

The specific bushings provide precise blade depth and maximizes the reliability of installation.

Contact the factory for specific bushing sizes. Cable specifications will be required.

Current available bushings:

Available Sizes	
Part Number	**Cable Size**
3270-1	15kV 653.9 ALUM
3270-2	15kV 336.4 ALUM
3270-3	15kV 4/0 ALUM
3270-4	15kV 1/0 ALUM
3270-5	15kV #2 ALUM
3270-6	15kV #4 ALUM

Insulation Removal

1542 Series Insulation Stripper

Cable O.D. range 1/2" to 1-3/4" (12.7-44.5 mm)

The 1542-2CL and 1542-2AS series strippers are designed to remove PE, XLP, EPR and other types of insulation from power cable.

The tools provides precise blade depth adjustment and maximizes the reliability of installation.

No bushings are required.

kV Class/Conductor Size

- 5kV / 1000 MCM and smaller
- 15kV / 750 MCM and smaller
- 25kV / 350 MCM and smaller
- 35kV / 3/0 and smaller

1542-2CL
Adjustable insulation stripper.

1542-2AS
Adjustable insulation stripper that combines the features of the 1542-2CL speed stripper and the 1700SS semi-con scorer.

1646X
Scale gauge attachment to set stripback length. (Included with 1542 series tools)

1646X
(Included)

SCAN FOR VIDEO

1542-2CL
With wedge blade installed, spare straight blade

1542-2CL-1
With wedge blade installed, spare wedge Blade

1542-2CL-2
With straight blade installed, spare straight blade

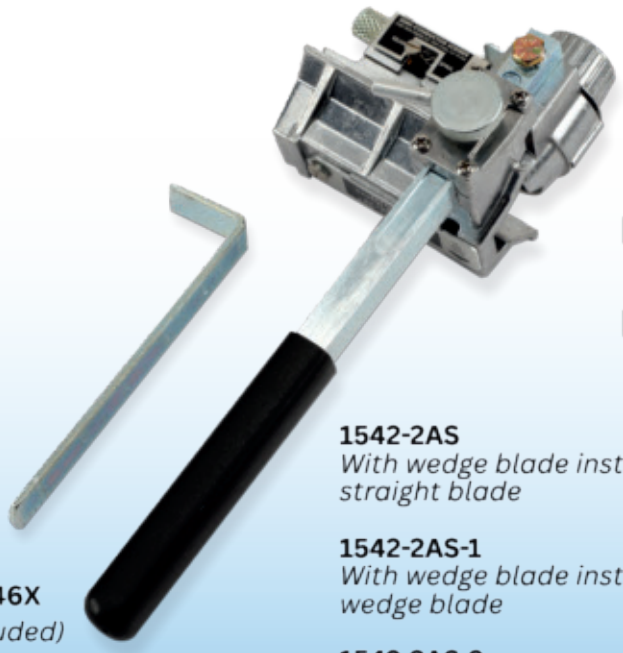

1646X
(Included)

SCAN FOR VIDEO

1542-2AS
With wedge blade installed, spare straight blade

1542-2AS-1
With wedge blade installed, spare wedge blade

1542-2AS-2
With straight blade installed, spare straight blade

1542 Series Accessories

Speed Systems offers a complete line of replacement blades, tool stops and accessories

1590X - Small Cable Adapter
For cables 5/16" to 1/2" (8.0 - 12.7 mm)

1646X - Scale Gauge
Measures stripback

Split Handle
*Optional folding handle. Add **S** to catalog number (i.e. 1452-2CL-S)*

2689 - Chamfering Tool / Scale Gauge
(2672 replacement chamfering blade, see page 12)

1678 - Scoring Blade
(see page 12)

1581 - Straight Blade
(see page 12)

1562 - Wedge Blade
(see page 12)

1650X - Tool Stop

Insulation Removal

SCAN FOR VIDEO

Mark Series Strippers

The Mark series strippers combine heavy-duty design with precision components. Heat-treated rollers are angle mounted for better cable feed and reduced drag on the cable surface as the tool is rotated.

The adjustable side frames eliminate the need for bushings or adapters, and are clamped to the cable with knurled thumb nuts.

A tool stop accessory is available to ensure an accurate square cut every time.

For cables with the semi-con bonded to the insulation, the AO13 blade is available to shave off the semi-con layer.
(see page 12)

Mark I
With AO11 wedge blade for cable O.D. range 3/4" to 2" (19.1 - 50.8 mm). Shown with tool stop accessory (sold separately).

Mark II
With AO11 wedge blade for cable O.D. range 1-3/4" to 3" (44.5 - 76.2 mm). Shown with tool stop accessory (sold separately).

Mark-II-10
With AO10 large blade for 69kV - 138kV cables. Cable O.D. range 1-3/4" to 3" (44.5 - 76.2 mm)(not shown).

Mark III
With AO10 large blade for cable O.D. range 2-3/4" to 4" (69.9 - 101.6 mm). Shown with tool stop accessory (Included).

AO10 - Large Blade
For 69kV - 138kV cables (only fits the Mark-II-10 and Mark III tools. (see page 12)

AO11 - Wedge Blade
(see page 12)

AO12 - Straight Blade
(see page 12)

AO13 - Shaving Blade
(for bonded semi-con)
(see page 12)

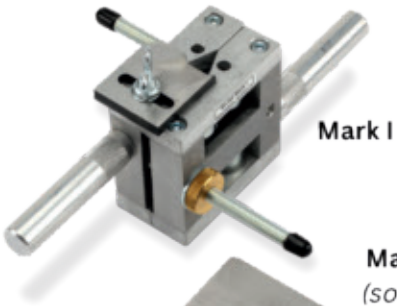

Mark I

Mark I Tool Stop
(sold separately)

Mark II

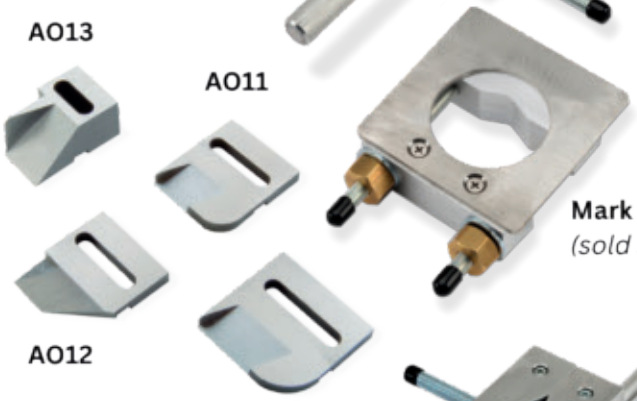

AO13

AO11

AO12

AO10

Mark II Tool Stop
(sold separately)

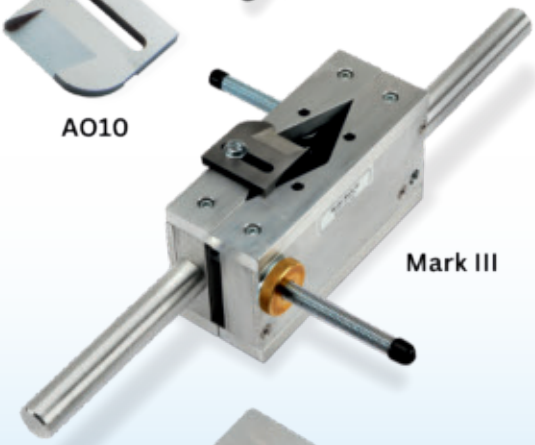

Mark III

Mark III Tool Stop
(included)

Outer Jacket Removal

LPW-N Series Probe Wrenches

The LPW1525/TK120X-N and LPW35R/TK120X-N combine the torque limiting probe installation features of the LPW series loadbreak probe wrench with an added neutral winding groove and cross hole providing neutral winding capability for removal of the outer jacket.

The neutral winder will not work on jacketed cable that has a ripcord or with a Mylar plastic or tape layer between the neutral wire and the jacket.

The neutral winder reduces neutral wire damage and breakage while splitting the outer jacket.

LPW1525/TK120X-N
See page 13.

LPW35R/TK120X-N
See page 13.

Neutral Winder

The neutral winder is designed to remove the outer jacket on underground power cable with embedded neutral wires. This method of jacket removal reduces neutral wire damage and breakage while splitting the outer jacket.

The neutral winder will not work on jacketed cable that has a ripcord or with a Mylar plastic or tape layer between the neutral wire and the jacket.

The tool includes a 3/8" drive in the hub.

NW-15
Cable O.D. range 1"-2 1/2" (24.4-63.5 mm).

NW-35
Cable O.D. range 2 1/4"-3 1/2" (57.2-88.9 mm).

SCAN FOR VIDEO

Semi-Con Scoring

1700-SS Adjustable Blade Series

Cable O.D. 1/2" to 2" (12.7 - 50.8 mm)

The 1700 series semi-con scorers have adjustable blade depth (.001" - .100") for scoring (scribing) the semi-conductive shield of medium voltage cable so the semi-con can be removed without nicking or damaging the cable insulation.

The tool switches between the square and spiral cutting functions without removing it from the cable. Leaf springs maintain constant pressure during operation.

1700-SS
Adjustable blade scorer with square cut/spiral cut and dial locking set screw.

1700-SS-LC
Adjustable blade scorer with square cut/spiral cut and dial locking set screw. Saddle relief for close-in cut.

SCAN FOR VIDEO

1700-SS

1700-SS-LC

1701 Fixed Blade Series

Cable O.D. 1/2"to 2" (12.7 - 50.8 mm)

The 1701 has a fixed blade depth for scoring (scribing) the semi-conductive shield of medium voltage cable so the semi-con can be removed without nicking or damaging the cable insulation.

The tool switches between the square and spiral cutting functions without removing it from the cable. Leaf springs maintain constant pressure during operation.

1701
.023" blade depth

1701-1
.028" blade depth

1701-2
.033" blade depth

1701-3
.037" blade depth

Consult the factory for other blade depths.
Any blade depth from .010" to .095" is available.

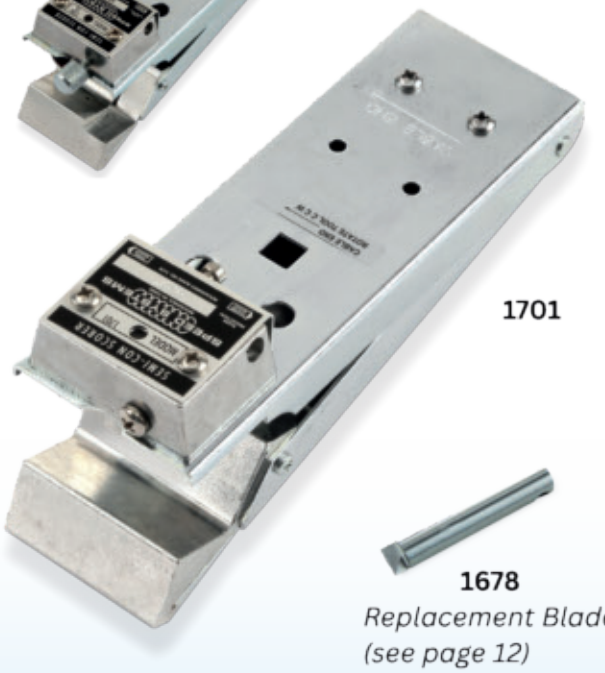

1701

1678
Replacement Blade
(see page 12)

Semi-Con Scoring

1800-SS Adjustable Blade Series

Cable O.D. 1-3/4" to 3" (44.5 - 76.2 mm)

The 1800 series semi-con scorers have adjustable blade depth (.001" - .100") for scoring (scribing) the semi-conductive shield of medium voltage cable so the semi-con can be removed without nicking or damaging the cable insulation.

The tool switches between the square and spiral cutting functions without removing it from the cable. Coil springs maintain constant pressure during operation.

1800-SS

SCAN FOR VIDEO

1800-SS
Adjustable blade scorer with square cut/spiral cut and dial locking set screw.

1800-SS-LC
Adjustable blade scorer with square cut/spiral cut and dial locking set screw. Saddle relief for close-in cut.

1800-SS-LC

1801 Fixed Blade Series

Cable O.D. 1-3/4" to 3" (44.5 - 76.2 mm) (not shown)

The 1801 has a fixed blade depth for scoring (scribing) the semi-conductive shield of medium voltage cable so the semi-con can be removed without nicking or damaging the cable insulation.

The tool switches between the square and spiral cutting functions without removing it from the cable. Coil springs maintain constant pressure during operation.

1801
.037" blade depth

1801-1
.046" blade depth

1801-2
.055" blade depth

1801-3
.064" blade depth

Consult the factory for other blade depths.
Any blade depth from .010" to .095" is available.

1678
Replacement Blade
(see page 12)

Chamfering Tools

CT Series

Chamfering tools cut a 45° bevel on the cable insulation to ease installation into molded rubber components.

The CT series tools are adjustable, with no bushings or adapters required.

The 2689 chamfering tool / scale gauge fits the 1542 series strippers to provide both scale gauge and chamfering capabilities.

CT-1
For 1/2" to 1-3/8" cables
(12.7 - 34.9 mm)

CT-2
For 1-1/4" to 2-3/4" cables
(31.8 - 69.9 mm)

2689
Chamfering scale gauge accessory for 1542 series tools.

CT-1

SCAN FOR VIDEO

2672
Replacement Blade
(see page 12)

2689

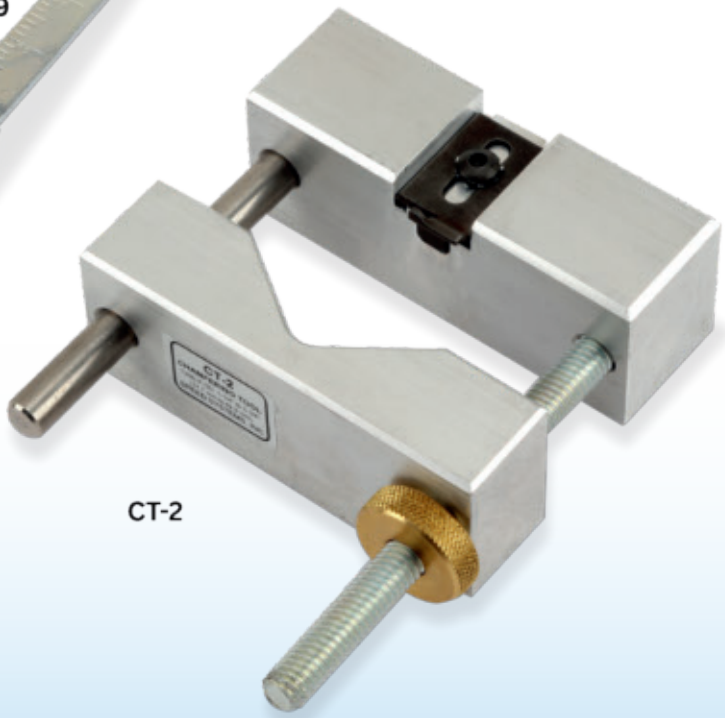

CT-2

Specialty Cable Prep

SCAN FOR VIDEO

2900

2872
(Replacement blade)
(see page 12)

Long Handles
(Included)

Aerial Tree Wire and Spacer Cable

2900 Series
The model 2900 aerial tree wire and spacer cable stripper performs both end strip and mid-span strips on 5kV through 35kV aerial tree wire and spacer cables.

The tool is fully adjustable and requires no bushings. The blade adjusts for insulation up to 300 mils thick and is field replaceable.

The 2900 series strippers allow unlimited stripback length.

2900
Insulation Stripper
(includes both long and short handles).

2900-LS
Stick-operable version.

2900 Tool Stop
Stick-operable tool stop (not included).

SCAN FOR VIDEO

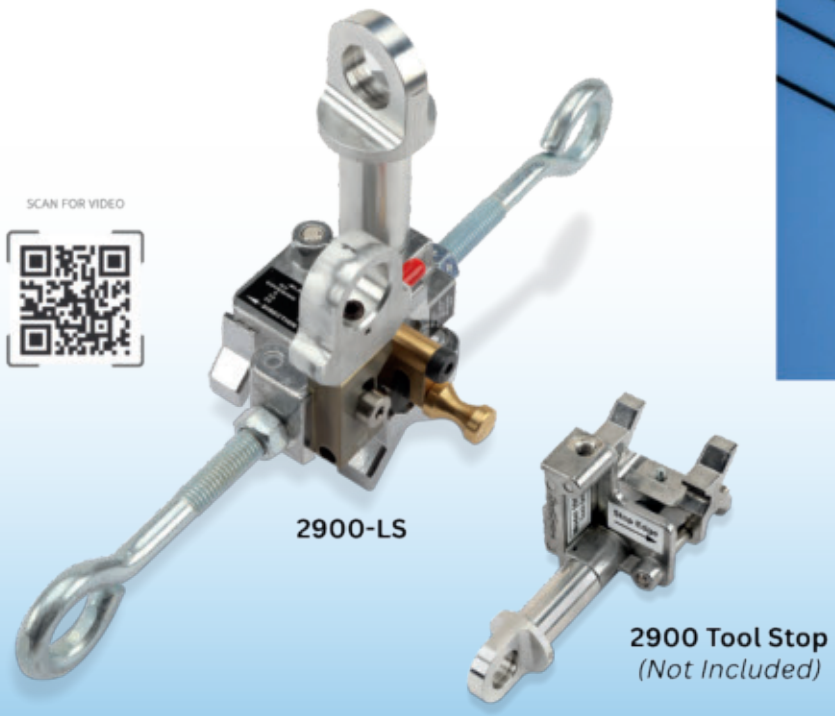

2900-LS

2900 Tool Stop
(Not Included)

Secondary Cable Prep

End-Strip

2750
Cable O.D. .31" to 1.375" (7. - 33.3 mm)

The model 2750 secondary cable stripper is designed to end-strip 600V cable. The tool is adjustable and strips #4 through 1000 MCM cable with 45 mil through 110 mil insulation thickness with no bushings required. It has an unlimited stripback length.

2750

SCAN FOR VIDEO

2750C
The model 2750C uses a chamfering blade (3157) to leave a 45° bevel on the secondary insulation.

2750-DO (Drill Operated)
Cable O.D. .31" to 1.375" (7. - 33.3 mm)

The model 2750-DO secondary cable stripper is a drill-operated version of our standard model 2750 that is designed to end-strip 600V insulation #4 through 1000 MCM cable with 45 mil to 110 mil insulation thickness. No bushings are required to adjust the tool to varying cable diameters and insulation thickness. Stripback length is .75" to 3.5".

2750-DO

SCAN FOR VIDEO

2781
Regular Blade
(see page 12)

3157
Chamfering Blade
(see page 12)

No Chamfer *Chamfer*

Secondary Cable Prep

Mid-Span & End-Strip

2850
Cable O.D. .31" to 1.375" (7.9 - 33.3 mm)

The Model 2850 secondary cable stripper is designed to both end-strip and mid-span strip 600V cable. The tool is adjustable and strips #4 through 1000 MCM cable with 45 mil through 110 mil insulation thickness with no bushings required.
It has an unlimited strip back length.

2850-S
Cable O.D. .31" to .72" (7.9 - 18.3 mm)

Short version for use on triplex cable or with limited workspace.

2850

SCAN FOR VIDEO

2787
Replacement Blade
(see page 12)

2850S

Covered Tap Wire

3050
Speed Systems covered tap wire strippers are specifically designed to perform end and mid-span stripping on covered tap wire. Cable samples may be required to ensure the tool is properly sized for the specific cable being stripped.

Example: 3050 #4 150SLD-H refers to a tool for stripping Hendrix #4 solid conductor wire with 150 mils of insulation.

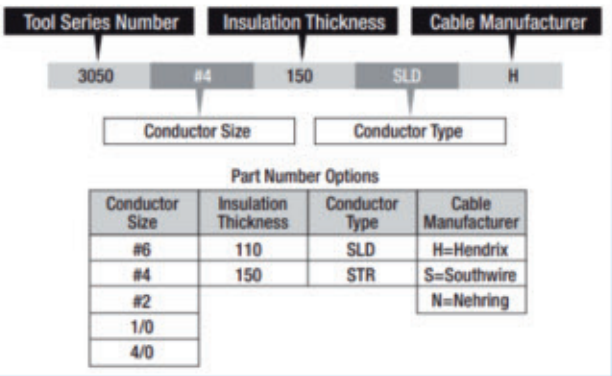

Part Number Options

Conductor Size	Insulation Thickness	Conductor Type	Cable Manufacturer
#6	110	SLD	H=Hendrix
#4	150	STR	S=Southwire
#2			N=Nehring
1/0			
4/0			

SCAN FOR VIDEO

3043
Replacement Blade

3050

Blades

1581 straight blade
The 1581 straight blade for the 1542 series is typically only required when stripping very soft EPR.

1562 wedge blade
The 1562 wedge blade for the 1542 series has a small foot at the bottom of the blade to assist in lifting the insulation away from the conductor as you strip the cable.

1678 scoring blade
The 1678 scoring blade is used on all Speed Systems semi-con scorers including the 1542-2AS.

2872 aerial tree wire/ spacer cable blade
The 2872 blade is used on all versions of the Model 2900.

3157
Chamfering blade for the 2750.

2672
Chamfering blade is used in the CT-1, CT-2 and 2689 to cut a small bevel on the edge of the insulation to ease insertion into molded rubber components.

2781
The 2781 blade is used in the 2750.

2787
The 2787 blade is used in the 2850.

AO13 shaving blade
Fits on all of the Mark series strippers. It is used to shave off the semi-conductive layer on those cables with bonded semi-con. Some sanding is likely necessary after shaving bonded semi-con.

AO11 wedge blade
Regular blade for Mark I and Mark II. Has a small foot at the bottom of the blade to assist in lifting the insulation away from the conductor as you strip the cable.

AO12 straight blade
Typically only required when stripping very soft EPR insulated cables with Mark series tools

AO10 large blade
Only used on the Mark II-10 and Mark III strippers. It is designed to strip 69kV to 138kV cables.

262-784-8701 · www.spdsystems.com

Torque Tools

Loadbreak Probe Tools

The Speed Systems loadbreak probe wrenches provide a means of preventing probe arc follower contamination and other damage when installing the probe into a loadbreak elbow. The tool holds the loadbreak probe for positioning into the threaded eye of the elbow crimp connector.

The torque limiter is preset and is rotated until it clicks, indicating that the preset torque has been reached.

The LPW1525 series tools fit all 15kV and 25kV elbows and Elastimold 35kV elbows.

The LPW1525/TK120X-N adds a neutral winding groove and cross hole option to reduce neutral wire breakage when splitting the outer jacket. (see page 5)

The DPW1525 provides a means for installing deadbreak elbow probes. The tool features a built-in, pre-set torque limiter that provides consistency of probe tightness.

LPW1525/TK120X-N
Combination tool with neutral winder. (see page 5)

LPW1525/TK120X
Combination tool

TK120
Torque limiter with 1/4" square drive.

LPW1525
Probe wrench only for use with 1/4" square drive.

TK120S
Replacement torque limiter with 3/8" round stub. (not shown)

LPW35R/TK120X-N
Combination tool with neutral winder. The LPW35R series tools only fit Eaton (Cooper/RTE) and Hubbell (Chardon) 35kV elbows.

DPW1525
Probe wrench for deadbreak elbow.

Torque Tools

Bushing Insert Tools - 200A

BIT/E180 Series

The BIT/E180 series bushing insert tool provides preset torque for installation and removal of bushing inserts with a 5/16" internal hex socket. Available in both t-handle and eye versions. The torque limiter locks while reversing to allow the tool to be used to remove bushing inserts.

BIT/E180AT
Bushing insert tool with torque limiter and t-handle, 5/16" hex shaft.

BIT/E180AH
Bushing insert tool with torque limiter and eye, 5/16" hex shaft.

BIT/E180AT

SCAN FOR VIDEO

BIT/E180AH

BIT/TK Series

The bushing insert tool is designed to provide operating personnel with an effective and reliable means of installation and removal of bushing inserts. The tool has a nut to allow use of a wrench for removing bushing inserts.

BIT/TK120X-Q
Bushing insert tool with torque limiter. Fits loadbreak bushing inserts.

BIT/TK120X-N
Bushing insert tool with torque limiter. Fits deadbreak bushing inserts.

SCAN FOR VIDEO

BIT/TK120X-Q

BIT/TK120X-N

Torque Tools

Loadbreak Reducing Tap Plug Bushing Tools

The LRTP bushing insert tool is designed to deliver a preset torque for the installation of 600A T-Body components, featuring both 5/16" and 3/8" internal hex sockets. The LRTP series tools provide options of 20 ft-lbs (240 in-lbs.) or 55 ft-lbs of torque. The torque limiter locks while reversing, allowing the tool to be used for component removal.

Refer to the component manufacturer's instructions for the recommended torque value of specific components.

LRTP/TK240AT
Bushing insert tool for 600A LRTP with t-handle and 240 in-lb. torque limiter. (20 ft-lbs.)

LRTP/TK240AH
Bushing insert tool for 600A LRTP with eye and 240 in-lb. torque limiter. (20 ft-lbs.)

LRTP/TK55
Bushing insert tool for 600A LRTP with 55 ft-lb. torque limiter and ½" drive.

LRTP/TK55H
Bushing insert tool for 600A LRTP with 55 ft-lb. torque limiter and eye.

LRTP-12
5/16" hex shaft with a 1/2" drive.

LRTP-12-38S
3/8" hex shaft with a 1/2" drive.

TW516-13
5/16" hex shaft with t-handle.

W516-13
5/16" hex shaft with 3/8" drive.
(not shown)

SCAN FOR VIDEO

Component Installation & Removal Tools

TAT - T-Body and Cable Adapter Tool
The TAT is designed to assist in the installation of 15kV, 25kV and 35kV 600 amp cable adapters and T-Bodies onto high voltage underground cable for deadfront apparatus. The tool includes a combination 3/4" / 3/8" hex drive. The clamp fits #2 through 1250 MCM cable (0.75" - 2.42") (19 - 61 mm)

The TAT is drill operable to provide a significant ergonomic benefit. The tool has a 7-1/8" stroke and moves one inch with just two revolutions of the driver.

Includes carrying bag

SAT - Splice Tool
The SAT Splice assembly tool is designed to ease installation and assembly of 15kV, 25kV and 35kV molded rubber splice components. The tool includes a combination 3/4" / 3/8" hex drive. The clamp fits #2 through 1250 MCM cable (0.75" - 2.42") (19 - 61 mm)

The arms grip splice sleeves from 1-1/2" through 3-3/8" O.D.

The SAT is drill operable to provide a significant ergonomic benefit. The tool has a 15" stroke and moves one inch with just two revolutions of the driver.

Includes carrying bag

TAT/SAT - Combination Tool
The TAT/SAT combination tool combines the features of the SAT splice assembly tool and the TAT T-Body/cable adapter tool. The tool includes a combination 3/8" / 3/4" hex drive. The clamp fits #2 through 1250 MCM cable (0.75" - 2.42") (19 - 61 mm). Can also be ordered with 3/4" drive only **(TAT/SAT-34)**.

The arms grip splice sleeves from 1-1/2" through 3-3/8" O.D.

The TAT/SAT is drill operable to provide a significant ergonomic benefit. The tool has a 15" stroke and moves one inch with just two revolutions of the driver.

Includes carrying bag

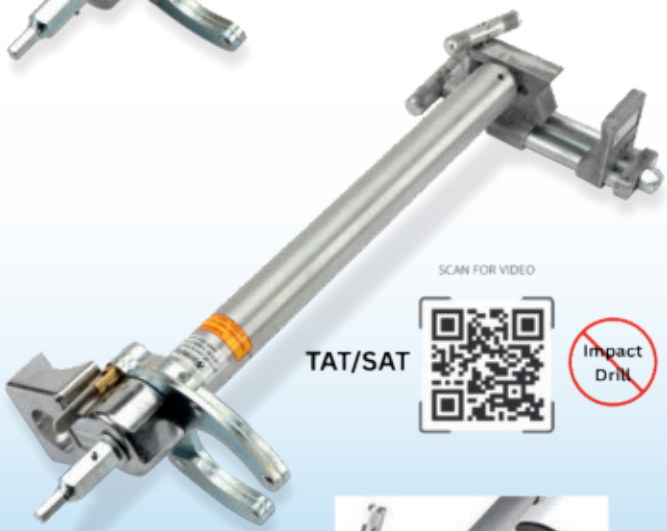

3155 Cable Adapter Stop Accessory
The 3155 is available to prevent the cable adapter from being forced further down the cable as the T-Body is installed. It is available separately or installed on the TAT or TAT/SAT by adding a -S to the part number **(TAT-S)**.

Component Installation & Removal Tools

CJT
The Speed Systems cable joint housing assembly/ disassembly tool is an ergonomic, drill-operable tool designed to assist in the assembly and disassembly of 15kV and 25kV 600 Amp deadfront cable joints onto high voltage underground cable.

The tool includes a combination 3/4" / 3/8" hex drive and has a 15" stroke.

Includes carrying bag

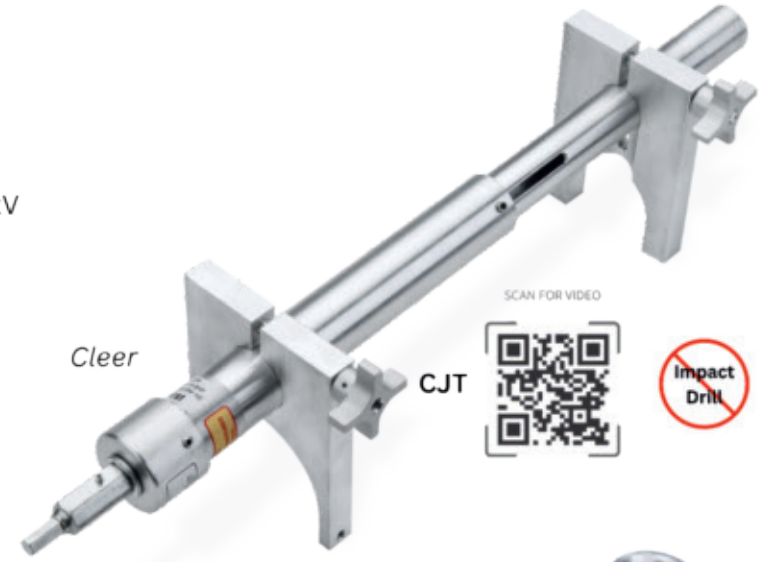

CLRT
The CLRT tool is an ergonomic tool designed to provide a means of freeing the Eaton/Cooper Power Systems Cleer 600A loadbreak components prior to breaking electrical contact.

The tool is sized to fit between the C connector's legs and provides 3/4" of stroke to break the seal without breaking the electrical contact.

Includes carrying bag

VSAT
The VSAT is an ergonomic, drill-operable tool designed to install vault stretcher molded rubber components onto power cables in a vault.

The tool includes a combination 3/4" / 3/8" hex drive and has a 15" stroke.

Includes carrying bag

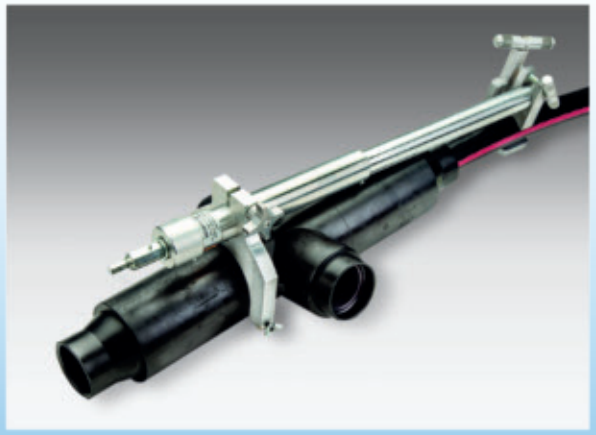

Ratcheting Box Wrenches

RBW-QUAD1
The RBW-QUAD1 includes 1/2", 9/16", 5/8" and 3/4" 12-point ratcheting box wrenches on Speed Systems' patented isolated handle. The blue isolated handle is rated for 1000V.

RBW-QUAD1

Dogbone Wrenches
Speed Systems' ratcheting box wrenches are designed to provide end to end isolation for maximum safety. The RBW wrenches have a center "window" displaying the separation of the tool ends and are rated for 1000V. The wrenches are available with a variety of end options.

Consult the factory for configurations other than those shown.

RBW-3478

RBW-12916

RBW-51638
5/16" x 3/8" box wrenches

RBW-38716
3/8" x 7/16" box wrenches

RBW-3812
3/8" x 1/2" box wrenches

RBW-38916
3/8" x 9/16" box wrenches

RBW-12916
1/2" x 9/16" box wrenches

RBW-1258
1/2" x 5/8" box wrenches

RBW-1234
1/2" x 3/4" box wrenches

RBW-91658
9/16" x 5/8" box wrenches

RBW-91634
9/16" x 3/4" box wrenches

RBW-5834
5/8" x 3/4" box wrenches

RBW-581316
5/8" x 13/16" box wrenches

RBW-11161316
11/16" x 13/16" box wrenches

RBW-11161516
11/16" x 15/16" box wrenches

RBW-3478
3/4" x 7/8" box wrenches

RBW-341516
3/4" x 15/16" box wrenches

RBW-131678
13/16" x 7/8" box wrenches

RBW-13161516
13/16" x 15/16" box wrenches

RBW-781516
7/8" x 15/16" box wrenches

Hex Wrenches

Hex Wrenches
Speed Systems' ratcheting box wrenches are designed to provide end to end isolation for maximum safety. The RBW wrenches have a center "window" displaying the separation of the tool ends and are rated for 1000V. The wrenches are available with a variety of end options.

All shafts are 1.5" long, unless otherwise specified.

RBW-1
Ratcheting box wrench with 5/16" hex shaft on one side.

RBW-1P
Ratcheting box wrench with 5/16" hex shaft and fixed penta.

RBW-2
Ratcheting box wrench with 5/16" hex shaft extending on both sides.

RBW-2P
Ratcheting box wrench with 5/16" hex shaft extending on both sides and fixed penta. (not shown)

RBW-3
Ratcheting box wrench with 5/16" hex shaft on one side and 3/8" hex shaft on the other side.

RBW-3P
Ratcheting box wrench with 5/16" hex shaft on one side and 3/8" hex shaft on the other side, with fixed penta. (not shown)

RBW-38H
Ratcheting box wrench with 3/8" hex shaft on one side. (not shown)

RBW-38HP
Ratcheting box wrench with 3/8" hex shaft on one side and fixed penta. (not shown)

RBW-51638H
Ratcheting box wrench with 5/16" hex shaft on one end of the wrench and 3/8" hex shaft on the opposite end. (not shown)

RBW-516H34
Ratcheting box wrench with 5/16" hex shaft on one end and 3/4" box wrench on the opposite end.

Alternate shaft sizes:
Standard size: 1.5"
For 1" shaft, add suffix A (RBW-1A)
For 1.75" shaft, add suffix B
For 2" shaft, add suffix C
For 2.5" shaft, add suffix D

Hex Wrenches

RBW-516RP
Ratcheting box wrench with 5/16" hex shaft on one end, and ratcheting penta on other end.

RBW-51638RP
Ratcheting box wrench with 5/16" hex shaft on one end, with ratcheting penta and 3/8" hex shaft on opposite end of the wrench.

RBW-51638SRP
Ratcheting box wrench with 5/16" hex and 3/8" socket on one end, and ratcheting penta on opposite end of the wrench.

RBW-516RP

RBW-51638RP

RBW-51638SRP

Penta Wrenches

Speed Systems offers both fixed and ratcheting penta wrenches for use on power transformers and switchgear. These are attached to Speed Systems' patented isolated handle and are rated for 1000V.

PW-2
Fixed penta security wrench.

RBW-RP
Ratcheting penta security wrench.

RBW-916SRP
Ratcheting penta security wrench and 9/16" socket.

RBW-34SRP
Ratcheting penta security wrench and 3/4" socket.

RBW-34SRP-L
Long version of RBW-34SRP wrench.

Contact the factory for styles and configurations not shown.

PW-2

RBW-RP

RBW-916SRP

RBW-34SRP

RBW-34SRP-L

Tap & Die Wrenches

RBW-TD Series

The RBW-TD tap and die wrenches have a tap and die for chasing threads on connectors, probes, and other hardware.

Contact the factory for styles and configurations not shown.

RBW-38TD
Ratcheting tap and die has a 3/8-16 tap and die for chasing threads on loadbreak elbow probes and connectors.

RBW-12TD
Ratcheting tap and die has a 1/2-13 bottoming tap and die for chasing threads on transformer ground lugs.

RBW-58TD
Ratcheting tap and die has a 5/8-11 bottoming tap and die for chasing threads on 600A connectors.

Non-Isolated Accessories

Overhead Lineman's Wrench

The OHW Series overhead lineman's wrench have 3/4", 1" and 1-1/8" square drive sockets on a single head for use on 1/2", 5/8" and 3/4" hardware. The wrenches have an open center to allow the bolt to pass through. The wrenches also have a large reversing lever and a padded handle.

The OHW series also includes a two-sided 3/4" and 9/16" 12 point ratcheting box wrench on the opposite end.

The OHW-D version has deeper sockets to allow more clearance between the pole and the user's hand.

OHW
3/4", 1" and 1-1/8" square drive sockets on one end and 3/4", 9/16" ratcheting box wrench on the other end.

OHW-D
3/4", 1" and 1-1/8" square drive deep sockets on one end and 3/4", 9/16" ratcheting box wrench on the other end.

Penta Security Wrench Accessories

PHW-1
The PHW-1 has a penta socket on one end and a 3/4" hex on the other. It is made of stainless steel with a captive folding cross-rod for leverage.

PHS-1
Penta and 3/4" hex reversible security wrench with a 3/8" center square drive.

PHS-2
Penta and 3/4" hex reversible security wrench with a 1/2" center square drive.

OHW

OHW-D

PHW-1

PHS-1

PHS-2

Isolated Accessories

Impact Drill

ISE Series

Isolated Shaft Extensions are designed for use with a socket wrench or torque wrench where total isolation is required between the socket and extension.

The ISE series tools are constructed with thick-walled filament wound fiberglass shafts and provide total end to end separation for isolation.

ISE-375
Isolated shaft tool has a 5/16" hex shaft and 3/8" drive for use on secondary set screw bar connectors.
(3.75" overall length, rated 1000V, 600 in. lbs.)

ISE-4
Isolated shaft tool has a 5/16" hex shaft and 3/8" drive for use on secondary set screw bar connectors.
(4.5" overall length, rated 1000V, 600 in. lbs.)

ISE-WE
Isolated shaft tool has a 5/16" hex shaft and 1/2" drive for use on secondary set screw bar connectors.
(5.5" overall length, rated 1000V, 600 in. lbs.)

ISE-6
Isolated shaft tool has a 3/8" pin lock drive for use as an isolated socket extension.
(6.5" overall length, rated 5kV, 600 in. lbs.)

ISE-6B
Isolated shaft tool has a 3/8" ball lock drive for use as an isolated socket extension.
(6.5" overall length, rated 5kV, 600 in. lbs.)

ISE-8
Isolated shaft tool has a 1/2" pin lock drive for use as an isolated socket extension.
(8" overall length, rated 5kV, 600 in. lbs.)

ISE-8B
Isolated shaft tool has a 1/2" ball lock drive for use as an isolated socket extension.
(8" overall length, rated 5kV, 600 in. lbs.)

ISE-14
Isolated shaft tool has a 1/2" pin lock drive for use as an isolated socket extension.
(14" overall length, rated 10kV, 600 in. lbs.)

Consult the factory for additional lengths.

Accessories

Knives and Pliers

The SC-10 and SC-11 are designed for lifting the front edge of the cable semi-con layer after it has been scored. The tools are supplied with a leather sheath.

The SC-13 Semi-con roller grip is designed to provide controlled rolling of the semi-con layer that has been scored. This method of rolling helps reduce tearing of the semi-con as it is being removed.

SC-10
Knife.

SC-11
Knife with finger grip.

SC-13
Semi-con roller grip.

UTR - Universal Test Rod
Allows testing 15kV, 25kV and Elastimold 35kV deadbreak and loadbreak bushings. It features an eye for stick operation and includes a disk for connecting test leads.

Not for use on Eaton (Cooper/RTE) or Hubbell (Chardon) 35kV bushings.

ECT-2 - Elbow Cleaning Tool
The elbow cleaning tool is designed to enable cleaning of the bushing cavity of 15kV and 25kV class loadbreak elbows. Made of PVC, the end of the tool has two slots to hold a cleaning cloth.

TPC-1 - Test Point Cleaner
The TPC-1 test point cleaner provides a stick-operable means of cleaning test points.

SC-10

SC-11

SC-13

UTR

ECT-2

TPC-1

Elbow & Cap Pulling Tools

PT-1525

The PT-1525 and PT-35 elbow/cap pulling tools are designed to assist in the removal of seized elbows and protective caps. The tools are used with a standard shotgun stick.

The PT-1525 and PT-35's lever action provides a significant mechanical advantage over other means of pulling elbows and caps.

PT-1525
Elbow/cap pulling tool for 15kV and 25kV elbows.

PT-TXS
Small T-body bridge.

PT-35

The PT-35 fits Eaton (Cooper/RTE) and Hubbell (Chardon) 35kV elbows and caps.

The PT-35 is available with a reversible channel for low-profile areas where the standard tool will not fit. **(PT-35R)**

PT-35
Elbow/cap pulling tool for 35kV elbows.

PT-TX
Large T-body bridge.

3133
Adapter for PUSH-OP applications.

The tools include a high-dielectric rope and a carrying bag.

Tool Boxes & Bags

CPK-12
Steel tool case
12" x 4.5" x 4"

CPK-14
Small canvas bag with internal pockets
17" x 8" x 11"

CPK-24
Large canvas bag with internal pockets
24" x 9" x 13"

TB-9
Small individual tool bag
6" x 10"

TB-10
Medium individual tool bag
7" x 14"

TB-11
Large individual tool bag
14" x 16.5"

TB-12
Extra large individual tool bag
22" x 6" x 3"

CPK-12

CPK-14

CPK-24

TB-12

TB-11

TB-10

TB-9

CPK-1
Kit with 1542-2CL, 1646X and 1700SS in a CPK-12 Case

CPK-2
Kit with 1542-2CL, 1646X, 1700SS, SC-11 and SC-13 in a CPK-12 Case

CPK-3
Kit with 1542-2AS, 1646X, SC-11 and SC-13 in a CPK-12 Case

CPK-4
Kit with 1542-2CL, 1646X, 1700SS, CT-1, LPW1525/TK120X-N, SC-11 and SC-13 in a CPK-14 Bag

CPK-5
Kit with 1542-2CL, 1646X, 1700SS, BIT/E180AT, LPW1525/TK120X-N, SC-11 and SC-13 in a CPK-14 Bag

CPK-6
Kit with Mark I, Mark I Tool Stop, 1700SS, SC-11 and SC-13 in a CPK-14 Bag

CPK-7
Kit with Mark I, Mark I Tool Stop, 1700SS, BIT/E180AT, LPW1525/TK120X-N, SC-11 and SC-13 in a CPK-14 Bag

CPK-8
Kit with 1542-2CL, 1646X, 1700SS, and LPW1525/TK120X-N in a CPK-14 Bag

CPK-9
Kit with 1542-2CL, 1646X, 1700SS, LPW1525/TK120X-N, SC-11 and SC-13 in a CPK-14 Bag

CPK-10
Kit with 1542-2AS, 1646X, LPW1525/TK120X-N, SC-11 and SC-13 in a CPK-14 Bag

CPK-11
Kit with Mark II, Mark II Tool Stop, 1800SS, CT-2, SC-11 and SC-13 in a CPK-24 Bag

Speed Systems tools are proudly manufactured in the U.S.A.

Speed Systems, Inc. Brookfield WI

262-784-8701 www.spdsystems.com